TECHNICAL DATA SHEET

GB100 VB SERIES

GAS BOOSTER

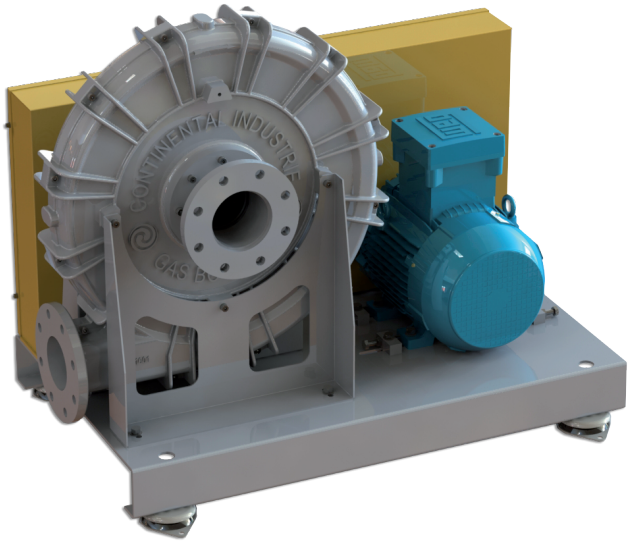

Safety requirements for equipment in hazardous areas ask for special blowers. Continental Industrie offers ATEX blowers for EX-zones 1 and 2 for the landfill and biogas.

MATERIALS OF CONSTRUCTION

Bearing housings : Cast iron EN-GJL-250
Head, Sections : Cast aluminium EN AC-42000
Joint sealing compound : RTVIS502 Silicone
Seals (gas) : Lip seals + V-Ring
Bearings : Ball bearings 6206 C3
Shaft : Stainless steel 42CrMO4
Impellers : Cast aluminium EN AC-43100
Motor pedestal : Structural steel.
Base frame installation : Antivibrations pads
Noise level : In compliance with OSHA standards when machine is fully, piped (certified tests available).

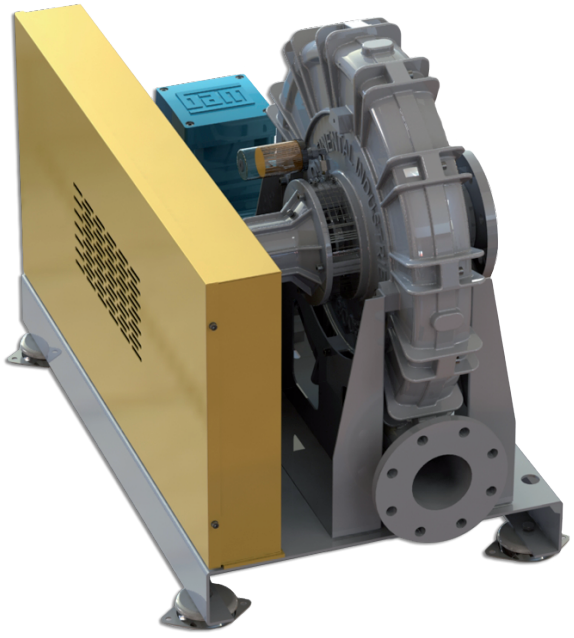

TECHNICAL DATA

Number of stage : 1
Inlet connection : 4" (100 mm) flange, DN100, PN10
Outlet connection : 4" (100 mm) flane, DN 100, PN 10
Operating speed : 2950 rpm to 5750 rpm V-belt drive
Lubrication : Automatic grease lubricator
Impeller diameter : 20" (500 mm)
Impeller tip speed : 494 ft/s (150 m/s)
First critical speed : 11342 rpm
Drive : V-belts
Vibration tolerance : 1.5 mils peak-to-peak (4,5 mm/s)
Shaft end : 0.945" (24 mm)

GASBOOSTER SIZE	P. motor (kW)	Weight (kg)	L (mm)
Gasbooster 100-01/001	1,5	154	1115
Gasbooster 100-01/002	2,2	164	1115
Gasbooster 100-01/003	3	166	1115
Gasbooster 100-01/004	4	182	1115
Gasbooster 100-01/005	5,5	198	1115
Gasbooster 100-01/007	7,5	209	1115
Gasbooster 100-01/011	11	258	1115
Gasbooster 100-01/015	15	278	1115
Gasbooster 100-01/018	18,5	284	1115

ISO 9001 BUREAU VERITAS Certification

ATEX

GB100 VB SERIES
GAS BOOSTER

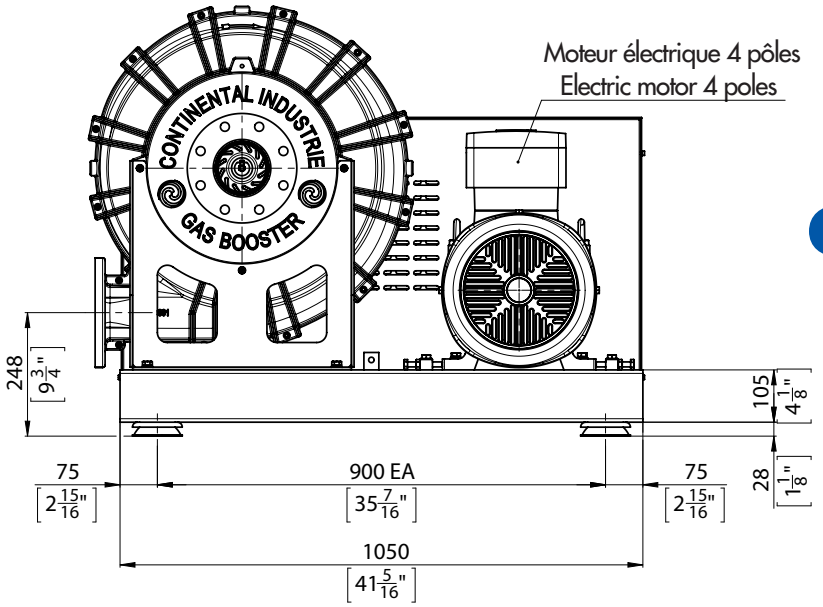

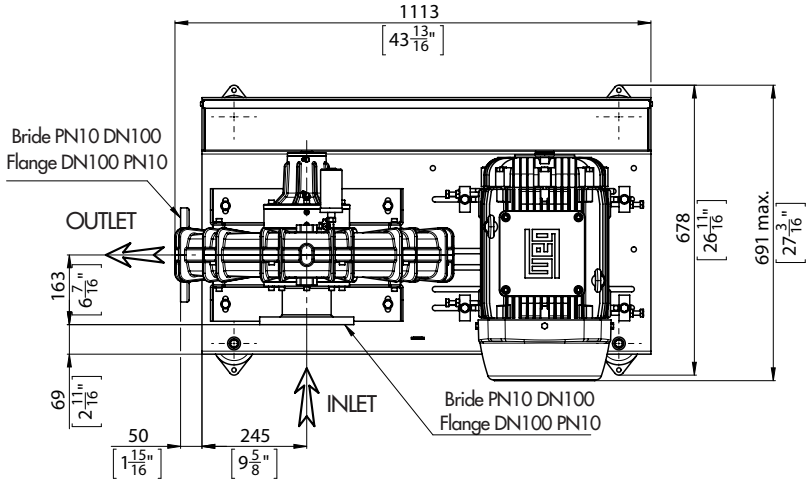

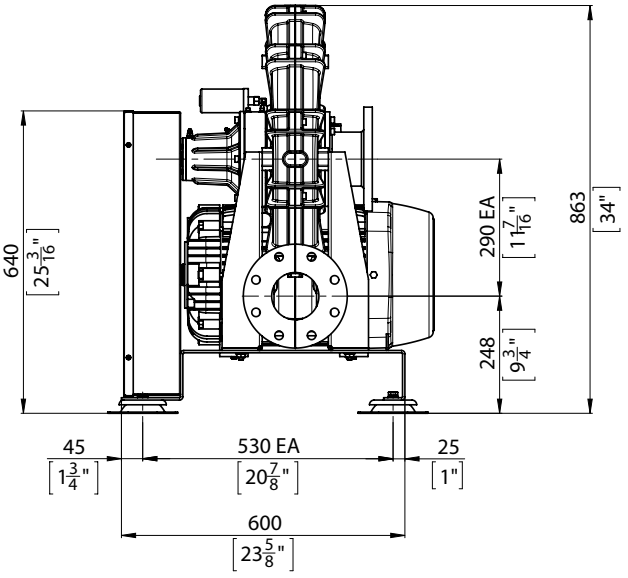

GB100VB : Biogas pressure curve characteristic

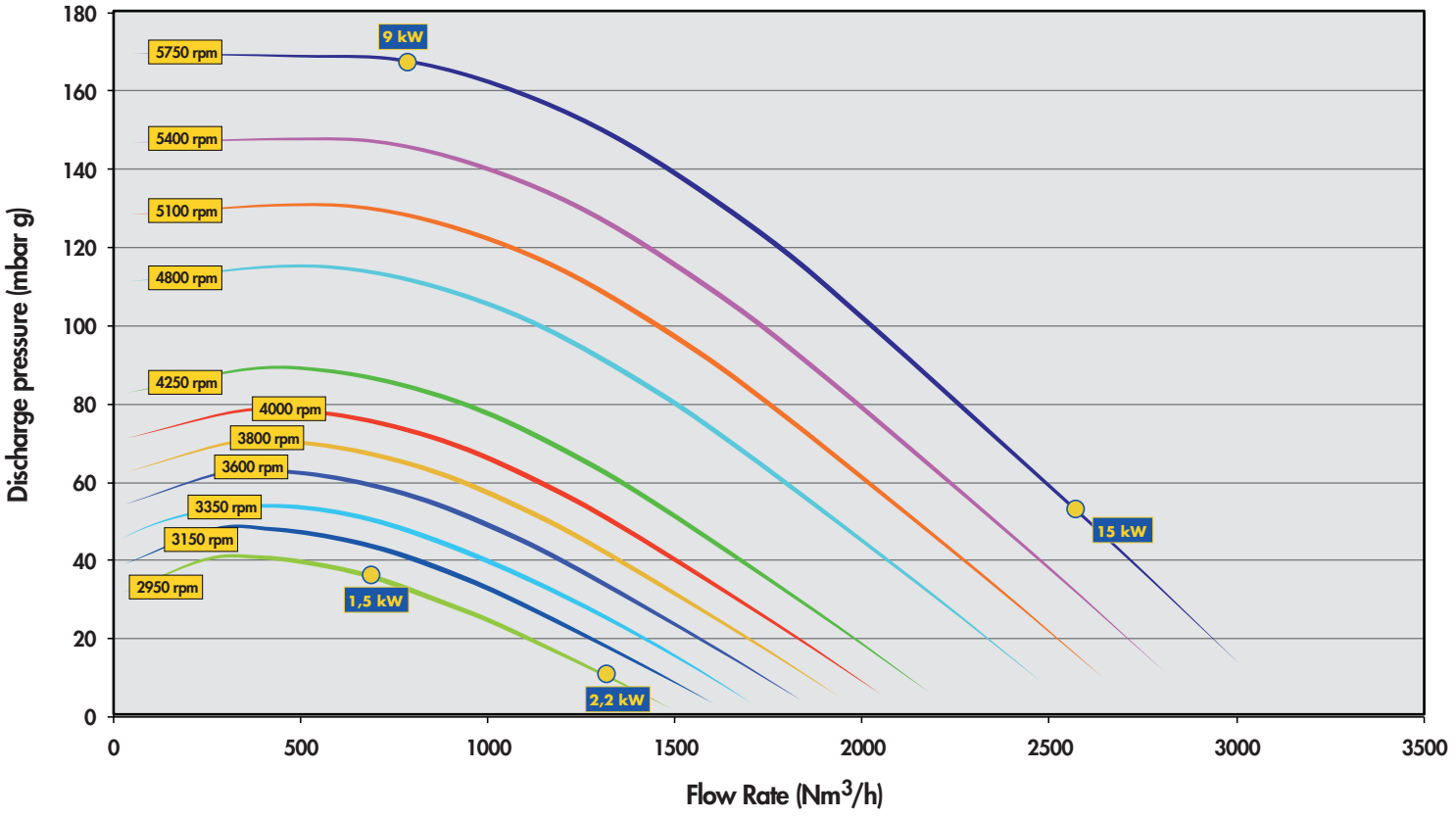

Values, dimensions and reference in this brochure are approximate and intended as a guide only, not for construction and are subject to change without notice.