TECHNICAL DATA SHEET

GB100 DD SERIES

GAS BOOSTER

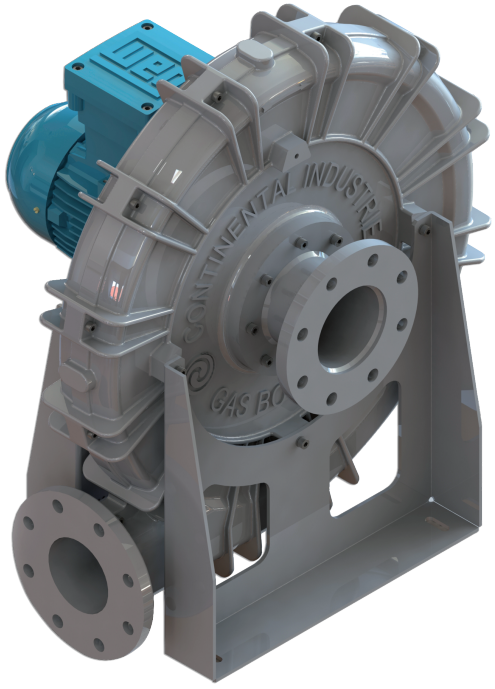

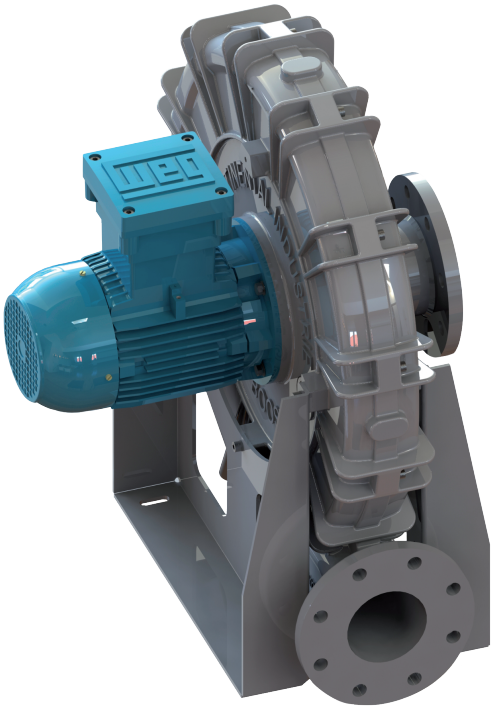

Safety requirements for equipment in hazardous areas ask for special blowers. Continental Industrie offers ATEX blowers for EX-zones 1 and 2 for the landfill and biogas.

MATERIALS OF CONSTRUCTION

Bearing housings : Cast iron EN-GJL-250
Head, Sections : Cast aluminium EN AC-42000
Joint sealing compound : RTVIS502 Silicone
Seals (gas) : Lip seals + V-Ring
Bearings : Ball bearings 6206 C3
Shaft : Stainless steel 42CrMO4
Impellers : Cast aluminium EN AC-43100
Motor pedestal : Structural steel.
Base frame installation : Antivibrations pads
Noise level : In compliance with OSHA standards when machine is fully, piped (certified tests available).

TECHNICAL DATA

Number of stage : 1
Inlet connection : 4" (100 mm) flange, DN100, PN10
Outlet connection : 4" (100 mm) flane, DN 100, PN 10
Operating speed : 2950 rpm or 3550 rpm
Lubrication : Automatic grease lubricator
Impeller diameter : 20" (500 mm)
Impeller tip speed : 494 ft/s (150 m/s)
First critical speed : 11342 rpm
Drive : Direct drive
Vibration tolerance : 1.5 mils peak-to-peak (4,5 mm/s)
Shaft end : 0.945" (24 mm)

ISO 9001 BUREAU VERITAS Certification

ATEX

GASBOOSTER SIZE	P. motor (kW)	Weight (kg)	L (mm)
Gasbooster 100-01/001D	1,5	83	489
Gasbooster 100-01/002D	2,2	85	514

GB100 DD SERIES

GAS BOOSTER

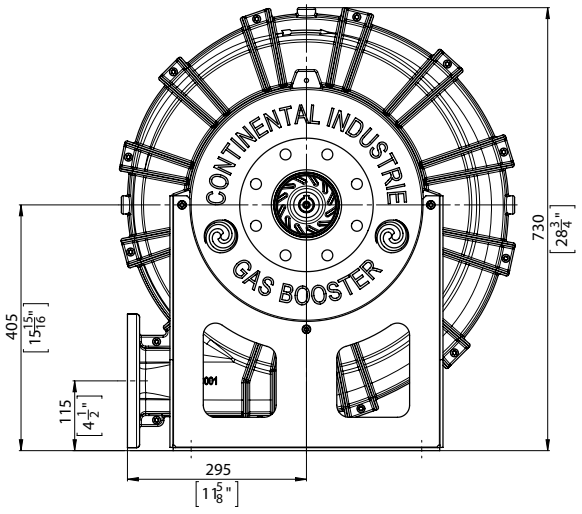

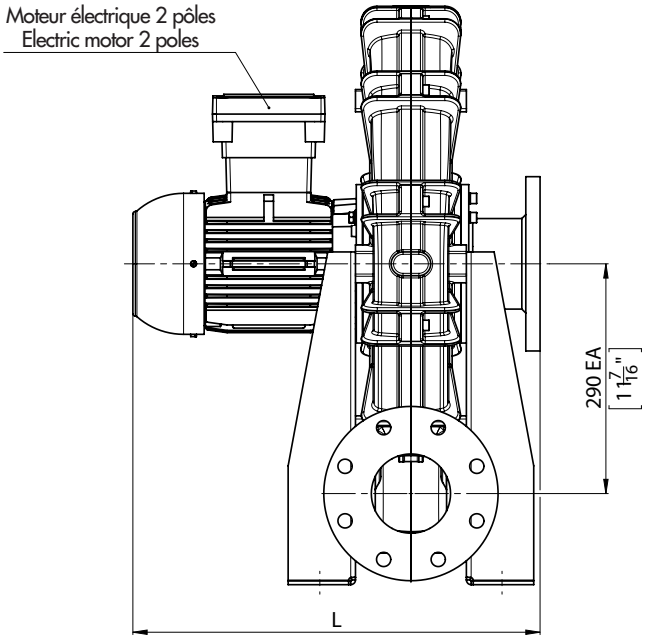

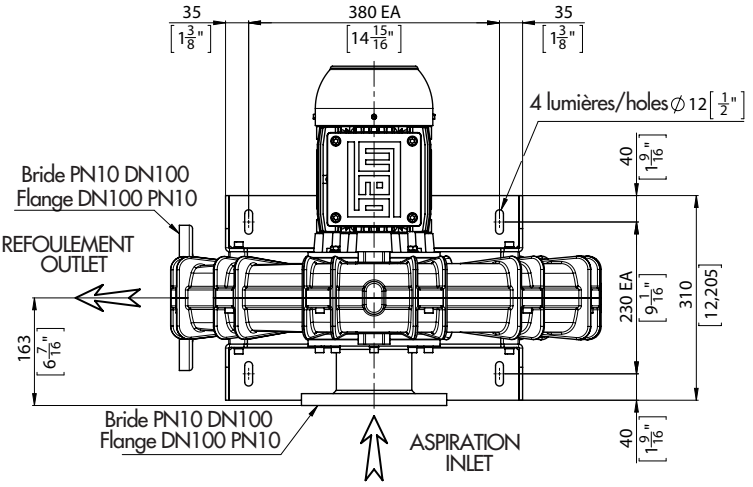

GB100DD : Biogas pressure curve characteristic

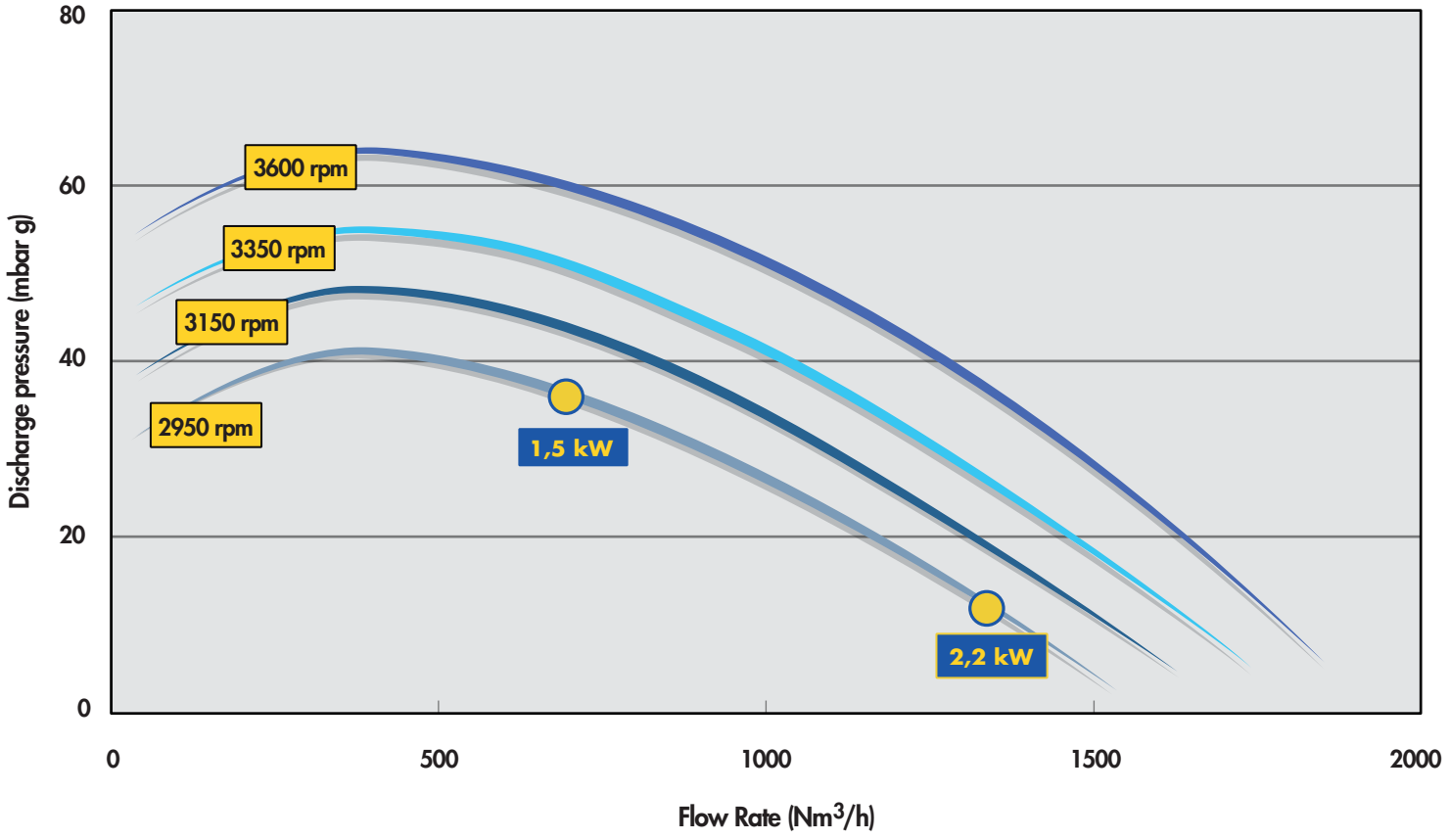

Values, dimensions and reference in this brochure are approximate and intended as a guide only, not for construction and are subject to change without notice.